Adaptec, Inc.
1545 Oak Hills Drive
Colorado Springs, CO 80919
Phone 719.598.2710
Fax 719.594.9514

A White Paper from Adaptec®, Inc.

# Fibre Channel, Storage Area Networks, and Disk Array Systems

*How Fibre Channel Will Affect The Future Of Disk Array Systems*

# Contents

Part I: Fibre Channel....1
I/O For 21st Century Computing....1
Fibre Channel Arbitrated Loop....2
Part II: New I/O System Possibilities With Fibre Channel....5
Fibre Channel Enables New I/O System Capabilities....5
Fibre Channel And Networks Of Servers....7
Fibre Channel And Clusters....7
Fibre Channel and Disaster Recovery....8
Larger Configurations And Disk Array Controllers....10
Part III: The Changing Role Of Disk Array Controllers....11
Disk Array Controllers....11
Using Fibre Channel To Shorten The I/O Path....11
Third-Party I/O in RAID Controllers....12
A Role For Disk Array Controllers?....13
Controller-less Fibre Channel SANs....14
Controllers And Disk Arrays....14
How SANs May Influence Disk Array Controller Evolution....16
Closing Observations....17

# Figures

*Figure 1: Storage System Application of Fibre Channel Fabric....1*
*Figure 2: Simple Storage Application Of A Fibre Channel Arbitrated Loop....2*
*Figure 3: Fibre Channel Arbitrated Loop Hub....3*
*Figure 4: Disk Array System in A Fibre Channel Arbitrated Loop....3*
*Figure 5: Fibre Channel Arbitrated Loop Integrated With A Fabric for Remote Storage....4*
*Figure 6: A Fibre Channel Storage Area Network (SAN)....6*
*Figure 7: A Fibre Channel Storage Area Network....7*
*Figure 8: A Fibre Channel Storage Area Network Supporting Multiple Clusters....9*
*Figure 9: Large SAN Configuration Using Fibre Channel Fabric....10*
*Figure 10: Typical Parallel SCSI Disk Array Controller Architecture....11*
*Figure 11: A Possible Fibre Channel-Based Disk Array Controller Architecture....12*
*Figure 12: RAID Update Comparison)....12*
*Figure 13: Fibre Channel Disk System Without Controllers....15*
*Figure 14: Logical Re-deployment Of Disk Capacity In A SAN....17*


© Adaptec, Inc.

© Adaptec, Inc.

# Fibre Channel, Storage Area Networks, and Disk Array Systems

*How Fibre Channel Will Affect Future Disk Array Systems*

## PART I: FIBRE CHANNEL

### I/O FOR 21ST CENTURY COMPUTING

In 1993, Hewlett Packard, IBM, and Sun Microsystems formed the Fibre Channel Systems Initiative (FCSI) in an industry-wide attempt to develop a standard I/O interconnection that would improve I/O performance and configuration flexibility. The result of this and subsequent collaborations is *Fibre Channel*, a standard for connecting electronic equipment needing to communicate to a communication network. In Fibre Channel jargon, the communication network is called a *fabric*, and each piece of equipment connected to the network is called a *node*. The Fibre Channel standards are analogous to the standard for connecting telephone and other instruments to the telephone network. In fact, the internal composition of a Fibre Channel fabric was not even standardized at first.

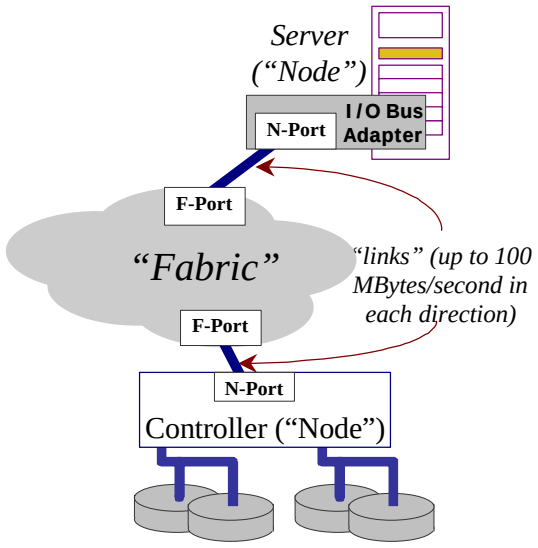


*Figure 1: Storage System Application of Fibre Channel Fabric*

*Figure 1* illustrates one possible storage application for Fibre Channel. In *Figure 1*, both the host computer's I/O bus adapter and the disk array system controller implement Fibre Channel node ports ("N-Ports") to connect to a Fibre Channel network (fabric). The fabric is often represented as an opaque cloud to signify that its internal construction is not pre-determined by the standards. In the example of *Figure 1*, the storage system model is the conventional store-and-forward model. Several leading storage system vendors are developing or shipping storage systems of this type using parallel SCSI disks. An alternative model using disks with N-Ports connected directly to a Fibre Channel fabric has also been proposed and is being actively pursued by some vendors.[1] A third model involved a store-and-forward controller connecting Fibre Channel disks to a Fibre Channel host port.

[1] For example, Box Hill Systems, Inc.'s *Fibre Box* host-based RAID disk array product.



© Adaptec, Inc. Printed: April 13, 1998 2:56 PM

One of FCSI's original goals was to define a universal physical communication medium that could support the requirements of multiple functional protocols simultaneously. Ideally, Fibre Channel would have been the "only wire" required by a user. While it is not clear that this lofty goal will ever be completely met, several functional protocols, including SCSI and TCP/IP, are advanced stages of standardization.[2]

The breadth of interests involved in the definition of Fibre Channel has also led to multiple variations of the physical standard. Standards exist for several transmission speeds, media, service levels, and topologies. Most important for storage systems is the 100 MBytes/second transmission speed on either copper cables (for lower cost over distances of up to 30 meters) or fiber optic cables (a higher cost option for communicating over distances of up to 10 kilometers).

## FIBRE CHANNEL ARBITRATED LOOP

Fibre Channel's fabric implies an inherently higher cost for Fibre Channel I/O systems compared to those using parallel SCSI or other alternatives. Recognizing this, a group of disk and other storage-related companies proposed a *loop* topology to simplify configurations and reduce cost. Adapting some token ring and FDDI concepts to disk I/O applications, the *Fibre Channel Arbitrated Loop* (FC-AL) standard:

- allows for up to 126 nodes in a loop,
- allocates bus bandwidth fairly among all nodes, and,
- substantially reduces I/O latency (compared to typical network protocols) by dedicating the loop's capacity during each data transmission.

Devices use an *NL-Port* to connect to a Fibre Channel arbitrated loop. To support complex configurations, an *FL-Port* was also defined, allowing (but not requiring) a Fibre Channel arbitrated loop to connect to a fabric.

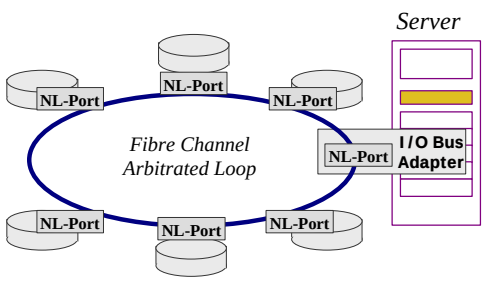


*Figure 2: Simple Storage Application Of A Fibre Channel Arbitrated Loop*

*Figure 2* is a conceptual diagram of a Fibre Channel arbitrated loop. The diagram suggests one of FC-Channel arbitrated loop to connect directly to disk drives. This is similar to using a parallel SCSI bus to connect a server's I/O adapter directly to disks. This type of FC-AL I/O subsystem contains the same number of major components as an equivalent parallel SCSI one, so in principle, its cost could be comparable. Based on component count, FC-AL subsystem cost could be low enough to make it practical for server applications of relatively modest size. Today, Fibre Channel components cost more than parallel SCSI ones, due to greater complexity, higher logic speed, and lower manufacturing volume. Higher cost can be justified where higher performance (100 MBytes/second), longer bus length (30 meters between nodes with copper transmission media), or greater connectivity (up to 126 devices per loop) are required. In time, as Fibre Channel components mature and production volume rises, cost can be expected to decrease.

The Fibre Channel arbitrated loop illustrated in *Figure 2* has the same availability shortcoming as a parallel SCSI bus—failure of the loop itself (e.g., a physical breakage) interrupts communication and makes all devices unavailable. FC-AL implementations, therefore, usually include two loops which connect the same set of nodes. Not only does this protect data availability in case a failure disrupts the loop; it also

[2] Fibre Channel is one of several communication media for which SCSI-3 specifications exist. A disk or disk array system with a Fibre Channel host interface may therefore properly be called a SCSI device, although this usage is uncommon; the unqualified phrase *SCSI device* almost always refers to a device connected to a parallel bus with interlocked signaling protocol.


© Adaptec, Inc.

doubles data throughput potential during normal operation.[3] For simplicity, dual loops are not shown in *Figure 2* or later diagrams. It is safe to assume, however, that most FC-AL systems will be built this way.

While a loop is conceptually a simple topology, cabling can be awkward to install and maintain. For this reason, most Fibre Channel arbitrated loops include *hubs*, or cable concentrators for wiring convenience. Hubs also provide bypass circuits (commonly called *loop resiliency circuits*, or LRCs), that allow devices to be inserted into or removed from an active loop with minimal disruption. Adding or removing a device interrupts data transfer briefly while the loop adjusts to the change, however, the disruption is very short (typically milliseconds). The protocol for loop reconfiguration, called loop initialization protocol, or LIP, is an integral part of the FC-AL standard.

*Figure 4* illustrates a more elaborate FC-AL storage application. In addition to the host computer and disk drives, a disk array controller is connected to the Fibre Channel arbitrated loop. Thus, as a server's storage capacity, I/O performance, and data availability requirements grow, these advantages of disk array systems can be combined with the performance of FC-AL. Moreover, as *Figure 4* illustrates, disk array systems can be intermixed with disks on a loop. This allows storage capacity to grow while preserving investments in directly attached disks.

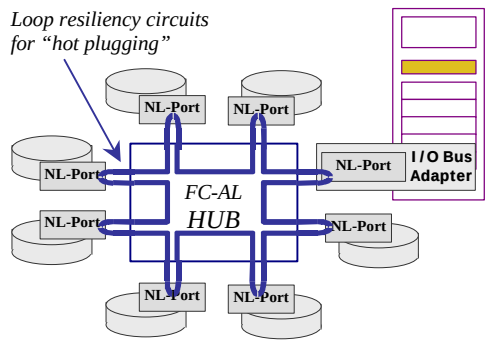


*Figure 3: Fibre Channel Arbitrated Loop Hub*

Some FC-AL hubs can accommodate both copper and optical ports, usually through the use of adapters between the two media. Although they are more expensive than copper, optical Fibre Channel links can run over distances of up to a kilometer (using multi-mode fiber), or up to 10 kilometers (using higher-cost single-mode fiber). Thus, a single hub can connect several co-located nodes (e.g., disk drives in a single cabinet) using low-cost copper, and one or two distant nodes (e.g., disk array controllers or servers with FC-AL adapters) using optical media. With Fibre Channel, storage can be located in a secure computer room environment, kilometers away from the servers to which it is connected.

Present-day cost, performance, and supply considerations motivate disk array system vendors to deliver disk array controllers that use Fibre Channel to connect host computers to UltraSCSI disks and other storage devices. These controllers combine the connectivity, data availability and other benefits of failure tolerant disk array systems with the performance and physical configuration flexibility of FC-AL.

As computer system distance, connectivity, and performance requirements continue to grow, Fibre Channel arbitrated loops can be attached to a Fibre Channel fabric to create very high-capacity or high performance systems with distributed components.

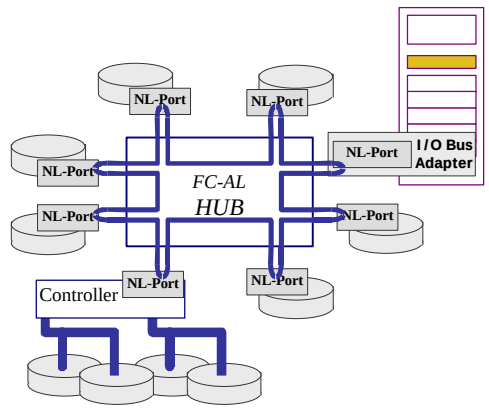


*Figure 4: Disk Array System in A Fibre Channel Arbitrated Loop*

[3] Data throughput *potential* doubles when two loops are connected to the same set of nodes because there are two 100 MByte/second paths for transmitting data. For data throughput to actually double, however, I/O load would have to (a.) saturate the capacity of the loops, and (b.) be perfectly balanced between the loops. It is usually safer to assume that parallel data transfer facilities will improve data throughput less than linearly.


© Adaptec, Inc.

*Figure 5* illustrates a Fibre Channel arbitrated loop using an *FL-port* to connect to a fabric. The FL-Port definition was added to the Fibre Channel standard to support this configuration. In the configuration illustrated in *Figure 5*, the storage connected to the arbitrated loop is accessible by the remote host computers as well as the local one..

The most frequently encountered Fibre Channel fabrics are crossbar switches. A crossbar switch provides connections to several (typically 16) nodes, and enables concurrent communication between node pairs. Fibre Channel protocols allow for both permanent and dynamic communication paths. A permanent ("Class I" or "Class 2") path provides guaranteed bandwidth between two nodes. A dynamic path allows any node connected to the switch to communicate with any other, provided that no third node is communicating with the target at the time. Some switches are designed so that they can be linked together ("cascaded") for greater total connectivity.

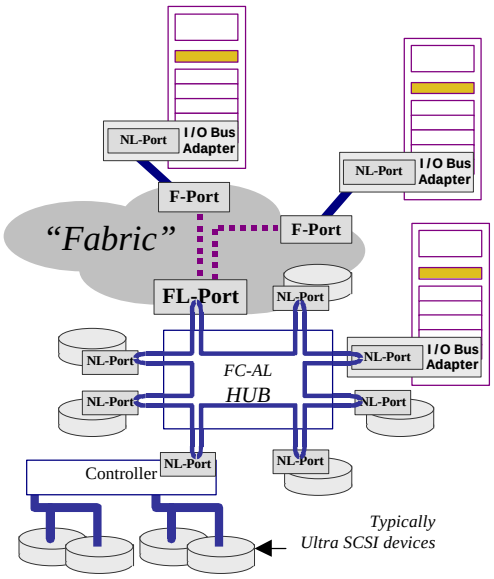


*Figure 5: Fibre Channel Arbitrated Loop Integrated With A Fabric for Remote Storage*

Fibre Channel switch designers foresee the interconnection of switches using high-bandwidth long distance communication facilities such as ATM-based services to allow distribution of a single fabric over distances of tens or hundreds of kilometers. While this is a natural extension for networks, there are protocol timing issues to be resolved for SCSI applications.

The Fibre Channel standards are also being augmented by the addition of a so-called *E-Port*, designed for interconnecting switches. While this work will clearly take a long time to mature, one long-term potential outcome is multi-vendor networked storage systems with components distributed over distances for disaster tolerance.

# PART II: NEW I/O SYSTEM POSSIBILITIES WITH FIBRE CHANNEL

## FIBRE CHANNEL ENABLES NEW I/O SYSTEM CAPABILITIES

In storage applications, a Fibre Channel arbitrated loop can outperform UltraSCSI as well as offering much greater configuration flexibility. These attributes alone would make it a desirable alternative for

ability to separate nodes by kilometers, however, Fibre Channel enables system designers and users to adopt new solutions to storage problems that have concerned them since personal computers arrived on the desktop.

While personal computers provide a new approach to many business problems, in doing so they create new management challenges. As users become accustomed to personal computing, they begin to "create" data and store it locally. Inevitably, personal data increases in value to the organization, and eventually, it must be cared for as any other asset. "Caring for" data means storing it in a physically secure and environmentally regulated location, as well as protecting it against destruction and inaccessibility due to equipment, software, and procedural failures. While valuable data assets stored in data centers are almost always professionally managed, it is rare to find desktop computing users who manage their data properly.

The need to keep "personal" data in a secure and manageable environment is one major impetus for client-server computing. Client-server computing technology has matured to the point that users can choose virtually any balance between centrally located resources ("thin" client) and resources at client desktops ("thick" or "fat" client). Today, however, the value of centrally located, professionally managed data storage is so clear that the great majority of organizations' information services policies strongly encourage, if not require it.

Centralizing storage for many clients, however, creates high network loads. Even with today's network segmentation techniques, LAN access to unrelated files by a large number of users can tax the average network infrastructures. As *Figure 6* suggests, a Fibre Channel *Storage Area Network* (SAN) can reduce the magnitude of this problem by providing an separate high-performance, block transfer-optimized path between users and data. With a Fibre Channel SAN, an enterprise can off-load individual user I/O traffic from its main network, reserving the latter for truly shared applications and data. Separating storage traffic from the enterprise network has several advantages:

- Fibre Channel's data transfer capacity is an order of magnitude higher than today's highest-performing readily available network technology (100 Mbits/second). The SAN provides high data transfer capacity precisely where it is needed most—to high-volume I/O.


© Adaptec, Inc.

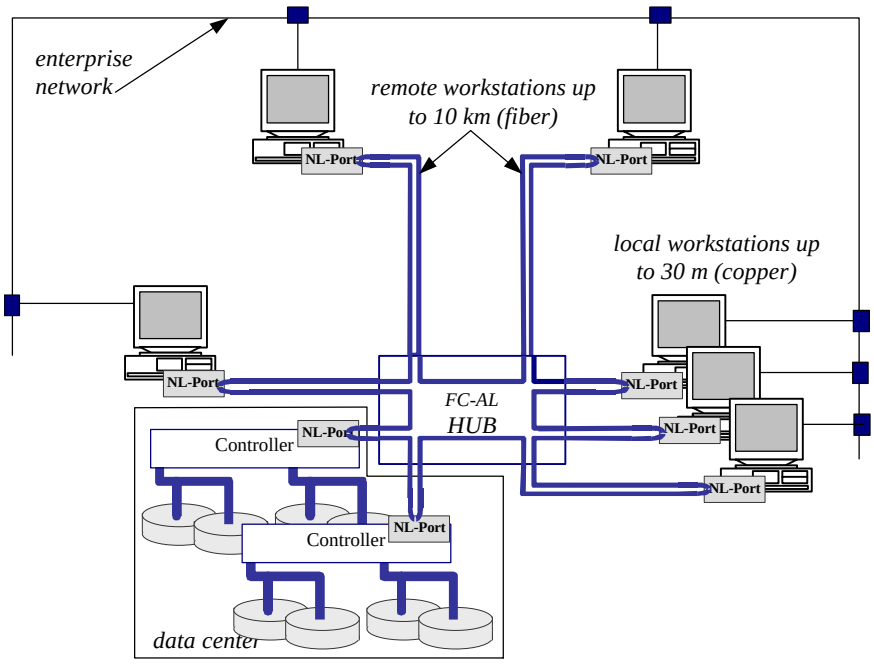


*Figure 6: A Fibre Channel Storage Area Network (SAN)*

- Even if the enterprise network is not near saturation, off-loading high volumes of large-block I/O tends to improve application responsiveness by eliminating a major source of *latency* (delay) in network traffic.
- Because Fibre Channel allows storage to be at a distance from the clients it serves, storage for many clients can be consolidated in a data center with a proper environment, and physical security, and backup procedures.
- Similarly, while it can be difficult to justify the cost of RAID for an individual client, the aggregate of many clients' storage requirements can easily justify it. In some instances, Fibre Channel can enable organizations to bring the data protection, performance and availability advantages of RAID to the desktop.
- Intelligent disk array controllers support disk *virtualization* (i.e., they present clients with virtual disks whose storage capacity is spread across several physical disks). The Fibre Channel storage area network illustrated in *Figure 6* makes it possible to move storage capacity from client to client as business requirements change, without physical hardware reconfiguration.

Thus, a Fibre Channel SAN can significantly improve the quality of data access services an information services department provides. A single Fibre Channel arbitrated loop can connect as many as 126 nodes, each of which may be a computer, disk or storage system. Fibre Channel's data transfer capacity of 100 MBytes/second makes it practical to densely populate such a SAN in many applications. Thus, the scenario illustrated in *Figure 6* can practically service work groups of 100 or more users.


© Adaptec, Inc.

## FIBRE CHANNEL AND NETWORKS OF SERVERS

The benefits of a Fibre Channel SAN are greater, however, when the SAN concept illustrated in *Figure 6* is applied to multiple *servers*.

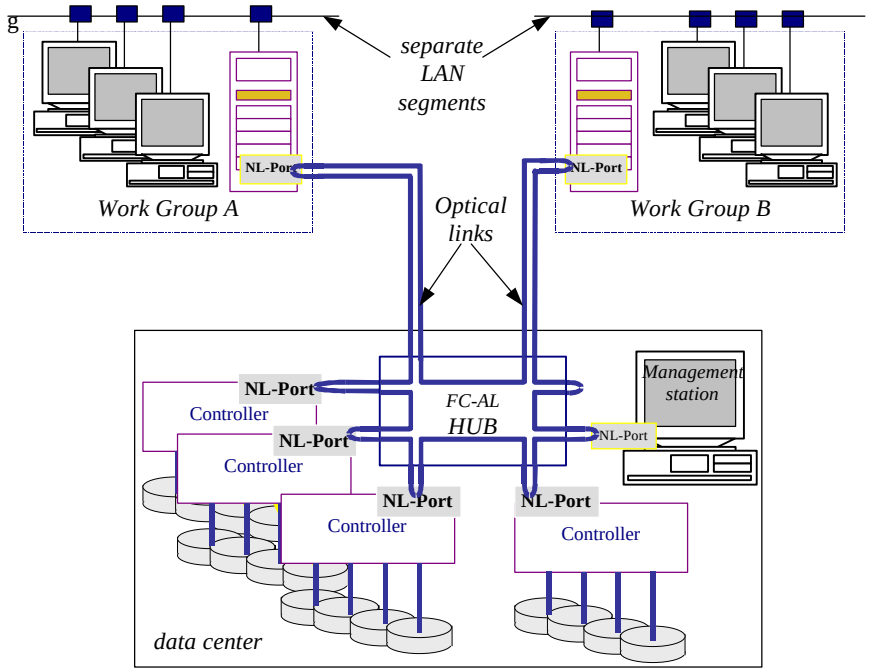


*Figure 7: A Fibre Channel Storage Area Network*

*Figure 7* illustrates a data center in which centralized storage is attached to intelligent disk array controllers. With 9 GByte disks, 200-500 GBytes can be attached to one disk controller, so *Figure 7* could represent TBytes of storage capacity. Moreover, a SAN also enables the sharing of costly tape libraries and other forms of storage among several computers. Storage within the computer room connects to the FC-AL hub using low-cost copper media. Also connected to the loop illustrated in *Figure 7* is a management station, which can be located in the computer room or elsewhere.

*Figure 7* illustrates multiple client-server environments connected to a single SAN, underscoring the point that with a SAN, storage capacity and I/O bandwidth can be managed separately from other computing resources. As with the workstation SAN illustrated in *Figure 6*, disk virtualization allows dynamic redistribution of storage capacity among servers according to business needs. Many disk array systems support *partitioning* of large RAID arrays into smaller virtual disks. For example, a RAID array of six 9 GByte disk drives with 45 GBytes of usable capacity might appear to servers as nine 5 GByte disks. Moving a 5 Gbyte virtual disk from one server to another is a management operation. No physical disk relocation or change in data protection characteristics is required.

## FIBRE CHANNEL AND CLUSTERS

The architecture illustrated in *Figure 7* is even more valuable in computer *clusters*. In the broadest sense, a cluster is a collection of two or more servers connected to the same clients and data. Clusters enhance application availability. Some also support application scaling and simplify system management. Clustering is becoming increasingly important as more mission critical applications are implemented using UNIX and “Wintel” server platforms.

Different vendors offer different clustering capabilities, ranging from human-assisted “fail-over” (restart of applications on an alternate server if the server on which they are executing fails), to sophisticated shared data models that present a single system image to applications, system administrators and users. The most flexible hardware platforms on which to implement clusters are those in which all servers have direct access to all data. Parallel SCSI’s limited addressing constrains the number of servers and disk array systems that can be connected. Today, the clusters that support the largest storage capacities are those such as IBM’s Parallel Sysplex and Digital’s VMScluster, both of which use proprietary I/O buses with much larger device addressing capability than parallel SCSI.

Clearly, Fibre Channel, with more device addressing than parallel SCSI, presents the opportunity to create larger clusters and attach more storage to them. Moreover, since Fibre Channel Arbitrated Loop protocols are *fair* (i.e., do not inherently give any node higher priority than others), they overcome another limitation of parallel SCSI for large clusters.

*Figure 8* illustrates another advantage of SANs in clusters. It shows a single storage area network serving two clusters. By consolidating storage in one location, the clusters’ environmental requirements can be relaxed without sacrificing data safety. Storage can be located in a regulated, secure, managed computer room, while servers can be sited for business convenience. Since the centrally located storage can be partitioned and allocated to clusters according to business needs, the benefits of managed storage become accessible to small clusters, an important consideration as Microsoft’s Cluster Server (code named “Wolfpack”) popularizes clustering for Windows NT servers.

## FIBRE CHANNEL AND DISASTER RECOVERY

As more organizations come to depend upon reliable computing to conduct their business, failure tolerance is no longer sufficient. In addition to protection against component and computer failures, users are demanding continued application availability even after *disasters* that incapacitate entire sites. The most common disaster recovery technique is replication of data at a remote site. If a disaster occurs, backup computers connected to the replicated data resume processing in a relatively short time. While this is not disaster *tolerance* in the sense of continuous application access, it is a significantly lower cost solution that is adequate for the majority of business applications.

Remote data replication can be provided by the cluster operating system (e.g., Digital’s VMSclusters, which offer remote disk mirroring), or by database *replication servers*, which transmit database updates to a disaster recovery site and apply them to a copy of the database. Some disk array system vendors also offer remote disk replication. In general, solutions that integrate storage, the data manager (database) and applications are preferable to disk mirroring because they can restore database consistency (so that only completed transactions appear in the recovery database) and assist with application restart.

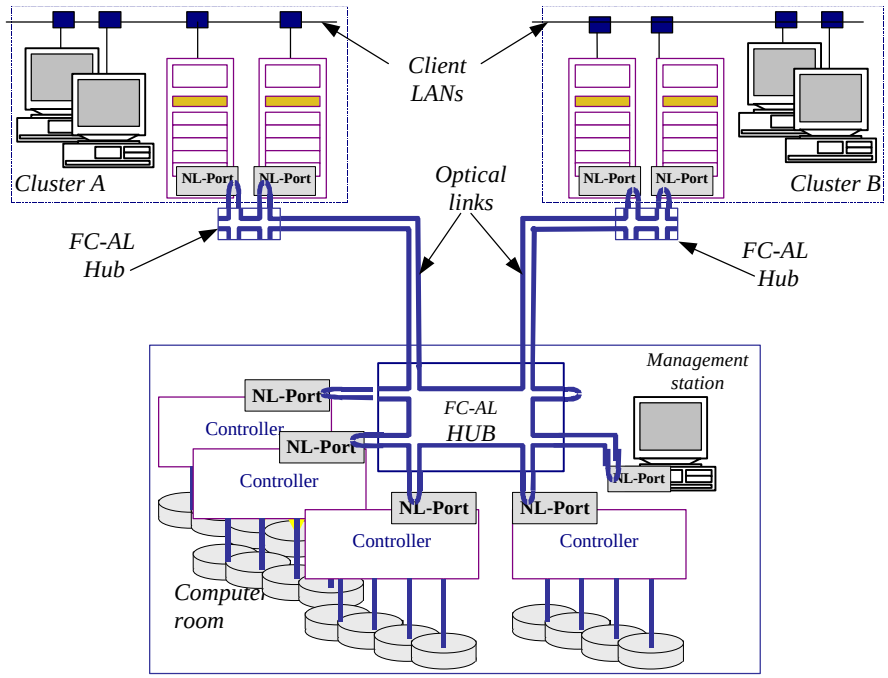


*Figure 8: A Fibre Channel Storage Area Network Supporting Multiple Clusters*

For most applications requiring long-distance data replication, today's network speeds (100 Mbits/second for LAN; 45 Mbits/second for T3, and 155 Mbits/second for ATM-based services) are adequate because only writes (a fraction of overall I/O) must be replicated. Usually, the write load can be balanced across multiple links if necessary. If recovery from a disaster requires copying the entire contents of many disks across the network, restoring protection can require days.

Fibre Channel makes long-distance replication of large amounts of data more practical. Fibre Channel supports much more rapid copying than a conventional LAN for two reasons:

- The SCSI command protocol that runs on Fibre Channel is optimized for large block data transfers. Most network protocols are optimized for multiplexing many concurrent streams of activity, and therefore operate at significantly lower link efficiency.
- The instantaneous data transfer speed of Fibre Channel is an order of magnitude greater than that of readily available LAN technologies. Even if one assumes a relatively modest 65% end-to-end efficiency (i.e., 65 MBytes/second), one Fibre Channel loop can sustain full-speed concurrent copying of five or six of today's highest-performance disk drives. The contents of six 9 GByte disk drives can be transferred in less than 15 minutes. A TByte can be copied in less than five hours.

For extended SANs that use long-distance communication facilities like ATM, the data recovery rate is lower, but still substantially greater than alternatives. Since there is roughly a 7:1 difference in data transfer speed between Fibre Channel and ATM, designers may develop devices to distribute one Fibre Channel data stream over several ATM circuits. The less readily available, but higher-performing (622 Mbits/second) O3 ATM service more closely matches Fibre Channel data transfer performance.


© Adaptec, Inc.

## LARGER CONFIGURATIONS AND DISK ARRAY CONTROLLERS

When Fibre Channel switches are introduced, SAN connectivity and bandwidth scale upward dramatically. A switch with 16 ports can support 16 arbitrated loops, each with a maximum of 125 nodes attached (the FL-Port that connects the loop to the switch is also a node), for a total potential of 2000 nodes. With 9 GByte disk drives, this represents a maximum capacity of over 15 TBytes of directly attached disk storage. Cascaded switches can extend connectivity and data transfer potential even further.

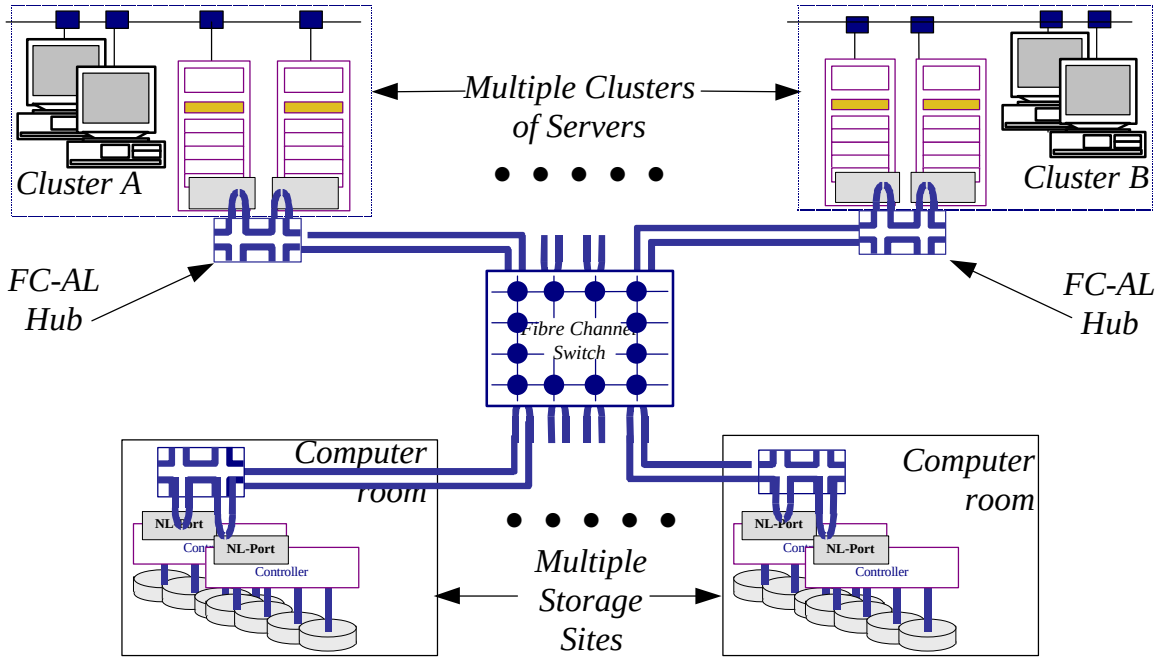


*Figure 9: Large SAN Configuration Using Fibre Channel Fabric*

# PART III: THE CHANGING ROLE OF DISK ARRAY CONTROLLERS

## DISK ARRAY CONTROLLERS

Historically, disk array controllers have been *store-and-forward* devices. Host computers send I/O commands and data to the controller, which receives them in their entirety and relays them to their destinations. Figure 10 illustrates a typical disk array controller architecture. The controller's internal bus connects the host and disk interfaces with the controller's cache.

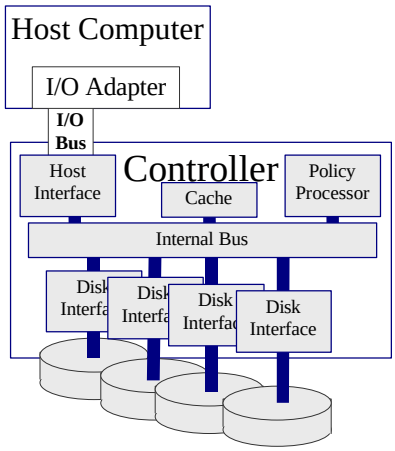


*Figure 10: Typical Parallel SCSI Disk Array Controller Architecture*

For example, a host's read command is first received by the controller's host interface. The controller's *policy processor* schedules the internal operations required to execute the host's command. For example, the policy processor converts each host read command addressed to a disk into an equivalent SCSI command. The SCSI command is sent to the SCSI interface connected to the target disk. The disk interface and the disk itself execute the command and deliver data to the controller's cache. When the data is available in cache, the policy processor schedules transmission to the host, completing the host's SCSI task.

More complex tasks, like reading data from a RAID array, require more extensive processing. For example, if a host's read requires data from two disks, the policy processor must schedule two disk read operations and ensure that all data has been delivered before it signals completion of the host's original request.

A key aspect of this architecture is intermediate storage of host commands and data in controller cache. Receiving and reprocessing host commands is how a controller adds its value, particularly in RAID arrays. Intermediate storage of data in the controller, however, adds no value, and increases command execution time. A better solution might be to send commands to the controller, but to route data directly from disk to host. This would not be possible with the controller architecture illustrated in Figure 10. Fibre Channel, however, would make it possible, if higher-level protocols were augmented appropriately. Figure 11 illustrates a Fibre Channel disk array design in which data could move directly between disk and host.

## USING FIBRE CHANNEL TO SHORTEN THE I/O PATH

The key difference between the architecture illustrated in Figure 11 and the more conventional one of Figure 10 is that one bus connects controller, host computer, and disks. With the architecture of Figure 11, data store-and-forward is unnecessary. For host I/O requests involving a single disk, the controller would relay each request to the target disk, specifying that data be delivered directly to the host.



© Adaptec, Inc. Printed: April 13, 1998 2:56 PM

With this architecture, host requests to a RAID array would be analyzed by the controller, which would generate the required member operations. For example, a host read request that required data from two disks would arrive at the controller as one request to a virtual disk. The controller would generate read commands to the two physical disks, *specifying that data be delivered directly to the host*. This is called "third-party" I/O. In the abstract, it allows one node (the controller) to request that other nodes (the disks) fetch data from or deliver data to a third node (the host computer). Third party I/O must be supported by the bus protocols in order for this technique to work. Third party I/O has been proposed for the Fibre Channel standards, partly in anticipation of such disk array controller architectures.

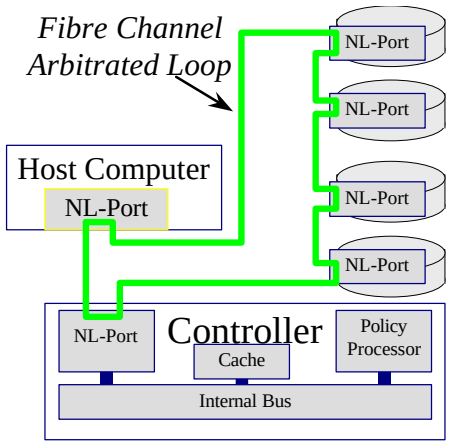


*Figure 11: A Possible Fibre Channel-Based Disk Array Controller Architecture*

## THIRD-PARTY I/O IN RAID CONTROLLERS

Disk drive vendors are encouraging disk array architectures like that illustrated in Figure 11 by adding disks features that use it effectively. Today, SCSI standards include disk read and write commands that allow disks to assist with RAID XOR computations. These commands minimize controller computational load, and also reduce internal I/O traffic generated by host write requests. Figure 12 compares internal I/O traffic generated by a RAID write using (a.) conventional SCSI disks, (b.) parallel SCSI disks able to assist with XOR computations, and (c.) Fibre Channel XOR disks using the architecture illustrated in Figure 11.

In a RAID array with conventional disks (Figure 12 (a.)), a host's single block write requires that both the data to be overwritten and the checksum protecting it be read from disks, and that the overwriting ("new") data and updated checksum be written. This is a total of four internal I/O operations. When XOR disks are used (Figure 12 (b.)), the new data is sent directly to the target disk using a special command. The special command causes the disk to read the data to be overwritten, XOR it with the new data, return the result ("partial checksum") to the controller, and write the new data. The controller then uses another special command to send the partial checksum to the disk containing the check data. This special command causes the disk to read the previous checksum and XOR it with the new partial checksum. The re-

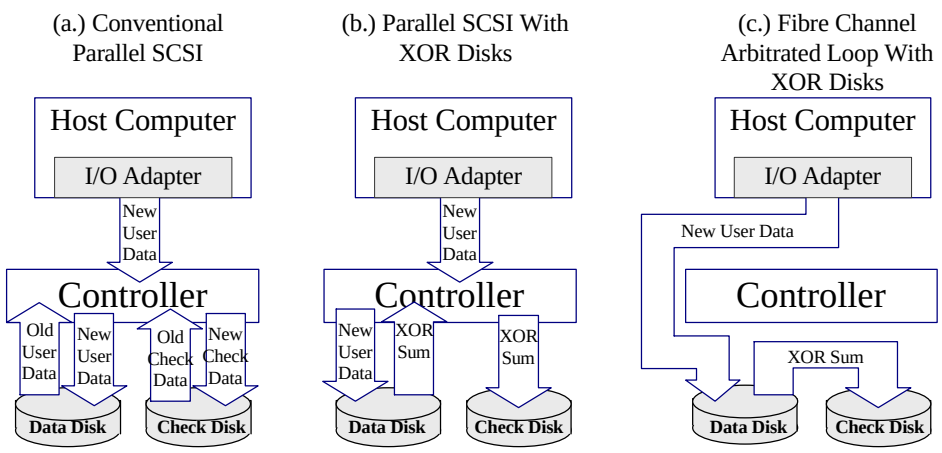


*Figure 12: RAID Update Comparison)*

sult is the new checksum, which is written back to the disk. As Figure 12 (b.) illustrates, using these special commands reduces internal disk bus traffic by 25% for every host write. This results in lower I/O request execution times and higher throughput due to reduced controller loading.

Combining the architecture of Figure 11 with XOR-capable disks can reduce internal bus traffic still further. Figure 12 (c.) illustrates the hypothetical use of an XOR-assist command to send data directly from host to target disk. A sufficiently intelligent target disk would send a partial checksum directly to the check disk, which would update the check data. This would reduce internal I/O traffic by 50% (compared to Figure 12 (a.)). Reducing internal I/O traffic can result in major performance improvements for write-intensive applications that use RAID data protection.[4]

## A Role For Disk Array Controllers?

When the architecture illustrated in Figure 11 and Figure 12 is applied to RAID systems, the controller is reduced to a relatively minor role. In fact, with a RAID- and XOR assist-capable host I/O driver, there would be no need for a controller. Eliminating the controller would reduce latency, because commands would not be sent to a disk array controller before execution. Eliminating the controller would also tend to make the disk array system less costly. One can ask, therefore, whether there is a role for disk array controllers in Fibre Channel I/O systems, or whether host I/O driver software and disk intelligence could replace them entirely.

Historically, disk array controllers have served three main purposes in I/O systems.

- They increase the number of devices that can be addressed. This is a particularly important consideration with parallel SCSI, which has limited device addressing.
- When separately packaged, controllers isolate disks from host computers, enabling continued data access after a host failure. This is especially important in clusters.
- They enhance function, for example, RAID and write-back cache. Functional enhancements have two aspects, algorithmic complexity (e.g., multi-disk RAID updates) and computational load (e.g., RAID XOR computations).

To gain these benefits, users have accepted the additional latency of store-and-forward controllers. With Fibre Channel, however, the situation changes in some significant ways:

- With one Fibre Channel loop theoretically able to connect more than 15 TBytes of storage today (and more in the future), controller device addressing is less important.
- Fibre Channel's bus length enables configurations in which disks and servers are widely separated. If the hosts connected to a Fibre Channel SAN can coordinate disk fail-over, controllers are not needed for this function.
- Other controller functions can also be performed by other system components. The *SCSI Enclosure Services* standard specifies the means for a host computer to monitor and control power, cooling, device state, and other aspects of a disk array system.
- As described on page 12, disks provide RAID assists. Other RAID functions are being implemented in ASICs that can be incorporated into server motherboards.

On the surface, it seems that with a Fibre Channel SAN, disk array controller functions could be performed by a combination of disks, I/O adapters, and host driver software. Why continue to use disk array

[4] This analysis ignores the effect of cache on RAID update performance. If either the data to be replaced or the parity protecting it were present in cache at the start of the update, the overhead for a conventional disk array system (Figure 12 (a.)) would be less, and the parallelism greater. In reality, the performance difference between the two architectures would be somewhat less than the 25% and 50% shown.


© Adaptec, Inc.

controllers, which add cost and latency? Is it possible that disk controllers as they are known today will disappear from the servers of the future?

## CONTROLLER-LESS FIBRE CHANNEL SANS

To assess the feasibility of controller-less Storage Area Networks, it is necessary to consider the controller's three roles—device addressing, availability and functional enhancement—more closely.

Device addressing is a lesser concern with Fibre Channel than with parallel SCSI. A Fibre Channel arbitrated loop allows 126 devices to be interconnected; when loops are attached to a switch, device attachment potential is multiplied many-fold. Cascading switches allow essentially infinite amounts of storage to be interconnected.

It is seldom convenient, however, for large database applications to address storage in physical disk-sized units. For example, storing a 75 GByte table on 9 GByte disks requires that the table be subdivided into at least nine sub-tables in such a way that left-over space is distributed among the disks. With a disk array controller, one could create a 90 GBbyte array addressable as one virtual disk. This would reduce the database administrator's workload and allow leftover space to be pooled for use by the entire table. Thus, with Fibre Channel, the disk array controller's ability to address more storage is diminished, but its ability to address storage in more convenient units is not.

The second role of disk array controllers is to enhance data availability. The controller is pivotal in enabling the disk array system to survive component failures and keep data safe and accessible. RAID is the controller's most visible availability enhancement. Disk array controllers also protect against failures of cache, power and cooling components, the controllers themselves, and, in clusters, host computer failures.

Some controller data availability enhancements may be difficult to supplant. For example, controller failure is often transparent to host computers, with a partner controller taking over the failed controller's devices. Without controllers, making failures transparent would require extremely complex distributed driver software. A still more difficult problem to solve without controllers is write-back cache coherency and failure tolerance. Without controllers, write-back cache may be impossibly complex to implement in clusters with more than two nodes.

## CONTROLLERS AND DISK ARRAYS

The disk array controller capabilities most difficult to replace are advanced functions. The best known advanced controller function is RAID. However, controllers provide other capabilities, such as I/O and disk media error recovery, failure prediction, and cross-device cache management. For all of these, the controller is a single point of control. With a single-host, driver software could be the single point of control. In multi-computer clusters, however, host software to coordinate multiple, possibly disparate computers' I/O drivers would be required.


© Adaptec, Inc.

Figure 13 illustrates a SAN cluster with no disk array controllers. Two host computers are connected to a collection of disks, four of which are managed as a RAID array.

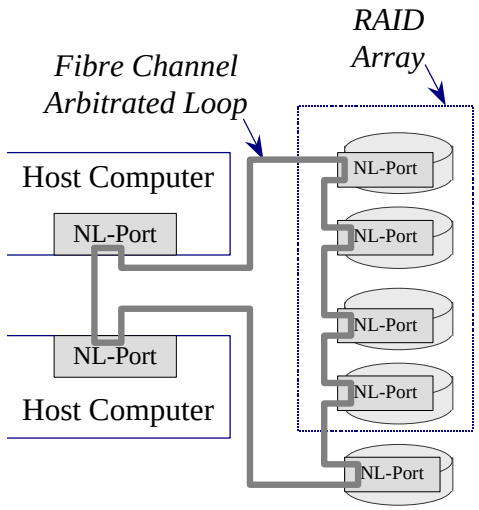


*Figure 13: Fibre Channel Disk System Without Controllers*

A disk connected to a SAN can either be under exclusive control of one host computer, or two or more host computers can share access to the disk (assuming that a distributed lock manager is available to coordinate data accesses). For the disks comprising the RAID array, however, the situation is more complicated. A user write to a RAID array is inherently non-atomic (i.e., it requires multiple read and write operations on different disks). Without a disk array controller to be the single point of control, a distributed locking mechanism would be required so that the user data and check data affected by the RAID update could not be otherwise accessed during the update.

Distributed locking requires message exchange among computers sharing resources. The technology is well understood, and could be used to coordinate multi-host access to host-based disk arrays. It has been used to implement host-based RAID for clustered computing environments,[5] but disk array controllers are a higher performance solution that does not generate lock traffic on the system's I/O buses.

Implementing host-based disk arrays for a homogeneous clustered computing environment is challenging. An environment in which different operating system platforms from different vendors shared access to host-based RAID arrays would be an enormously greater challenge. Heterogeneous computing environments are becoming common as users increasingly connect "best of breed" computers to enterprise storage systems. More and more organizations are purchasing each computer from the vendor who best meets application needs, and sharing an enterprise storage system among them to reduce cost and increase flexibility and manageability. Sharing SAN-attached host-based RAID arrays among hosts of different architectures would require a degree of vendor cooperation that the industry is far from achieving.

Even if vendors were to cooperate and develop distributed host-based RAID standards, host-based SAN-attached RAID arrays are not necessarily optimal for sharing storage among computers. Data is accessed through layers of abstractions including application, file system or database, I/O driver, controller firmware, and disk firmware. Objects in any layer of this hierarchy can be locked. The higher in the abstraction stack an object can be locked, the more contextual information is available to maximize a lock's effectiveness. For example, if a file is locked for exclusive access by one computer, then accesses to data within it need no locks. I/O drivers, however, have no awareness of file structures, so driver level accesses to a host-based array would require locking in this case.

In clusters, it is especially important to minimize lock message traffic, because it increases geometrically with the number of computers in the cluster. Excessive lock message traffic not only ties up the bus connecting the computers, it significantly increases I/O latency. Thus, in general, the higher the level at which data objects can be locked, the better will be the performance of the system in a cluster.

Being a single point of control, however, disk array controllers can coordinate multiple hosts' accesses a RAID array without locking. Their performance in clusters is therefore generally superior to that of host-based RAID arrays.

[5] For example, by Digital Equipment Corporation's *StorageWorks RAID Software for OpenVMS.*


© Adaptec, Inc.

Thus, in spite of their tendency to add latency, the advantages of disk array controllers will probably give them a continuing role in future I/O systems, particularly SAN-based ones. A natural question then becomes whether SAN capabilities can combine advantageously with those of disk array controllers to offer capabilities not available in today's storage systems.

## HOW SANS MAY INFLUENCE DISK ARRAY CONTROLLER EVOLUTION

Figure 11 illustrates one important way in which SAN capabilities could be combined advantageously with those of a disk array controller. The key difference between Figure 11 and the more conventional architecture illustrated in Figure 10 is that the former does not require a store-and-forward step in the data transfer path between host computer and disks. It does, however, have visibility to all transfers on the loop. The controller could thus receive host I/O commands addressed to RAID arrays, direct member read and write operations to disks as necessary, and specify that data be delivered directly to the requesting hosts. Using third party I/O commands eliminates most of the controller's latency as illustrated in Figure 12 (c.).

This example illustrates a general principle—the disk array controller in a Fibre Channel SAN can direct and coordinate the activities of several disks without being in the data transfer path. This should reduce I/O latency compared to parallel SCSI disk array controllers, for which this is not a viable option.

A potentially farther-reaching impact of the Fibre Channel SAN, however, is that for the first time, disk array controllers will be able to communicate with each other over relatively long distances. One obvious way to exploit this is to mirror data across long distances without involving host computers. Host-based mirroring across long distances has been a feature of several system architectures, including IBM's MVS/ESA and Digital's OpenVMS for some time. Aside from being limited to network data transfer rates, this technology is platform specific, and therefore not available for use with all system architectures. If data can be mirrored between widely separated disk array controllers that use standard host I/O protocols, then data protection against site disasters can be available for any computing platform. As clustered computing moves into the LAN server realm, where operating system capabilities are less mature, host-independent disaster protection becomes an increasingly important consideration.

An even more ambitious application of SAN disk array controllers may be integration of multiple controllers into a single *storage domain*. As disk array systems have matured, they have become more complex. While part of this complexity (e.g., RAID algorithms and device error recovery) is hidden from host computers, it is not generally possible to completely hide array *management* from the external environment. Most disk array system vendors offer management tools for their products so that users can configure them, monitor performance, and so forth. Other vendors have developed host-based *logical volume managers* that perform similar functions. What does not exist is platform-independent coordinated management of multiple disk array systems. Mutually aware management cores in disk array systems connected by a high-performance SAN offer some exciting possibilities for users with large storage "farms":

- With disk array controllers removed from the data transfer path, it should be possible for controllers to pass ownership of devices among themselves. This could provide a new level of configuration flexibility. For example, system administrators could logically "move" disks from one disk array system to another (e.g., if a disk failure required a RAID array rebuild), and then "move" them back again when appropriate, all with management operations. Similarly, it would be easy to re-deploy online storage capacity from one host computer to another to meet changing application needs.
- Tape library controllers could be located in vaults, and could communicate directly with disk array controllers to perform "host-less" backups. With a high-bandwidth SAN connecting disk array systems to backup systems, data could first be "cloned" using long-distance mirroring, allowing consistent backups with virtually no application downtime.
- Carrying this further, it should be possible to create "snapshots" of application data using well-known database techniques, and use these to create consistent backups at significantly lower overhead than


© Adaptec, Inc.

cloning. Making more frequent backups practical improves the quality of service an IS operation can deliver because when a file restore is required, a more recent copy is likely to be available.

- Much has been written on virtualizing storage—presentation of a virtual disk to host computers, while moving data's physical representation within the disk array system to optimize performance or to meet availability requirements. Implementations have been attempted, but probably on too small a scale to prove the technology's value. A high-performance SAN supports the scale of physical resources on which full virtualization of storage could be effective.
- There is active research in file system architectures that would lend themselves to distribution across a large number of entities, such as highly intelligent disk drives. A Fibre Channel SAN has the underlying performance and connectivity to realize this concept, allows the disks to be located according to application requirements. Intelligent disk array controllers can provide control points in such an environment, for example, for highly efficient locking of data objects.

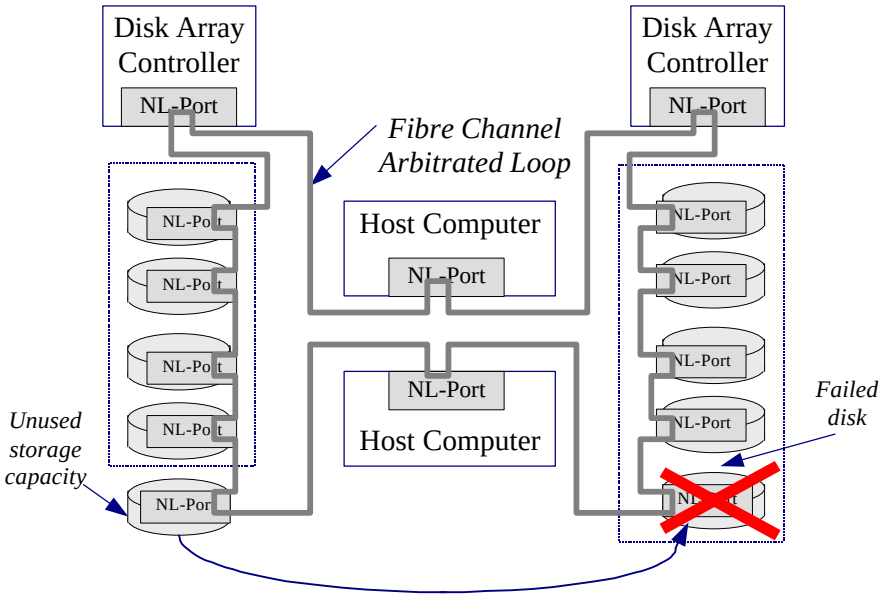


*Figure 14: Logical Re-deployment Of Disk Capacity In A SAN*

It is apparent that disk array controllers could enable new levels of I/O system productivity in Fibre Channel SAN environments. Of course, this paper has outlined capabilities made possible by SAN-based disk array controllers. Much hard work remains to vendors to architect and implement these solutions before their potential can be realized. How this work is carried out, whether proprietarily or using an open standards-based approach, determines how much of this potential will be realized in the I/O systems of the future.

## CLOSING OBSERVATIONS

This paper has outlined some exciting potential capabilities for future disk array systems that are enabled by a combination of the Storage Area Network (SAN) and development of today's disk array controllers to take advantage of SAN features. The required technologies are known, and are even now beginning to appear in products. How quickly and fully the benefits of these capabilities become available to users depends on three factors:

- Users' awareness of what is possible, expressed in demands to storage system vendors to provide functionality.
- Storage system vendors' response to user requirements, particularly with respect to standards-based or proprietary development.
- Vendors' ability to develop new capabilities in such a way that users can integrate them into existing systems, preserving investments in storage as they add new capabilities.

Users tend to focus on their most immediate problems. In the late 1980s, strong user demand for data reliability led to RAID systems. During the 1990s, user focus has shifted toward disaster tolerant data protection, high-performance backup of large disk installations, and simplified management of on-line storage. All of these problems can be addressed by SAN-based integrated storage domains. Convincing vendors to place a high priority on providing the tools to organize SAN-attached disk array systems into an integrated enterprise-wide storage domain will require users with the vision to realize what is possible and the influence to convince vendors to produce the right products. The benefits of SAN-based integrated storage environments are so great that the technology will ultimately become pervasive in large organizations. Only the speed with which the technology becomes commonplace and the degree to which the benefits are realized are under control of users.

The second factor determining how quickly SAN-based integrated storage domains will become generally available is the vendors' approach. In the mid-1980s, most computer system vendors implemented proprietary storage systems. During the last fifteen years, there has been near-universal adoption of standards-based SCSI as a server storage interface. I/O interface standards work continues; Fibre Channel standards have broken new ground in the sense that the industry cooperated to develop a completely new standard, rather than adopting existing technology donated by a vendor. While relatively receptive to new bus standards (e.g., IEEE 1394, SSA, and USB), the industry seems slower to embrace standards that affect the conventional disk device model. For example, it took nearly five years to develop a SCSI disk array management standard, and to date there are no implementations. Work on other high level standards required for multi-vendor integrated SAN environments, for example distributed lock management, third-party I/O, or direct disk array system-to-disk array system data transfer, is just beginning.[6] The market does not appear receptive to a return to proprietary environments, with their high prices and "lock-in" mentality. Thus, the degree to which multi-vendor integrated SANs succeed will be strongly affected by how effectively the needed standards work can be carried out.

The third factor influencing how quickly vendors introduce SAN-based integrated storage domains is their ability to develop new capabilities that can integrate with users' existing storage. While storage life cycles are shortening, many installations' major purchases are made with a three to five year planned lifetime. For users with TBytes of on-line storage, it is simply not economically feasible to think in terms of wholesale replacement. The speed with which integrated SAN-based enterprise storage will be accepted therefore depends on how well vendors can integrate new capabilities with their existing product families, so that users can evolve gradually to the integrated SAN, and get full value from storage investments already made. Vendors who adopt bridging technologies (e.g., disk array controllers that connect to the SAN, but use parallel SCSI disks) will be more successful in introducing integrated SAN technology to their users. Vendors who implement the entire paradigm as a new set of incompatible storage products will probably offer a richer set of capabilities at the outset, but will limit themselves to the completely new system market. They will not be as effective in phasing new capabilities into their existing bases.

[6] In part, under the auspices of the Storage Network Industry Association, SNIA.

Adaptec and the Adaptec Logo are trademarks of Adaptec, Inc. which may be registered in some jurisdictions.